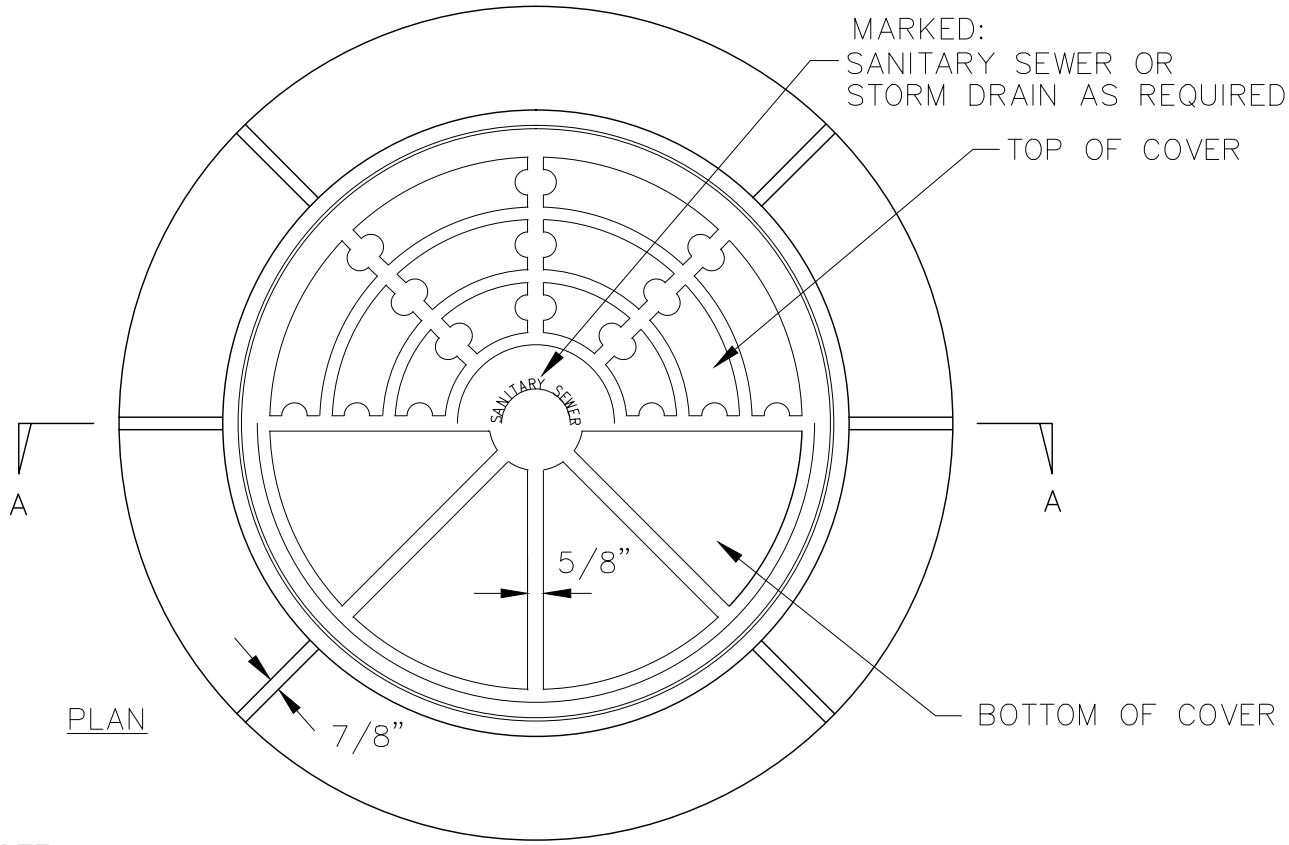

PLAN

NOTE:

RING & COVER CONTACT SURFACES SHALL BE MACHINED TO INSURE EVEN BEARING OF COVER AND RING

MINIMUM WEIGHTS:

RING 261 LBS.
COVER 120 LBS.

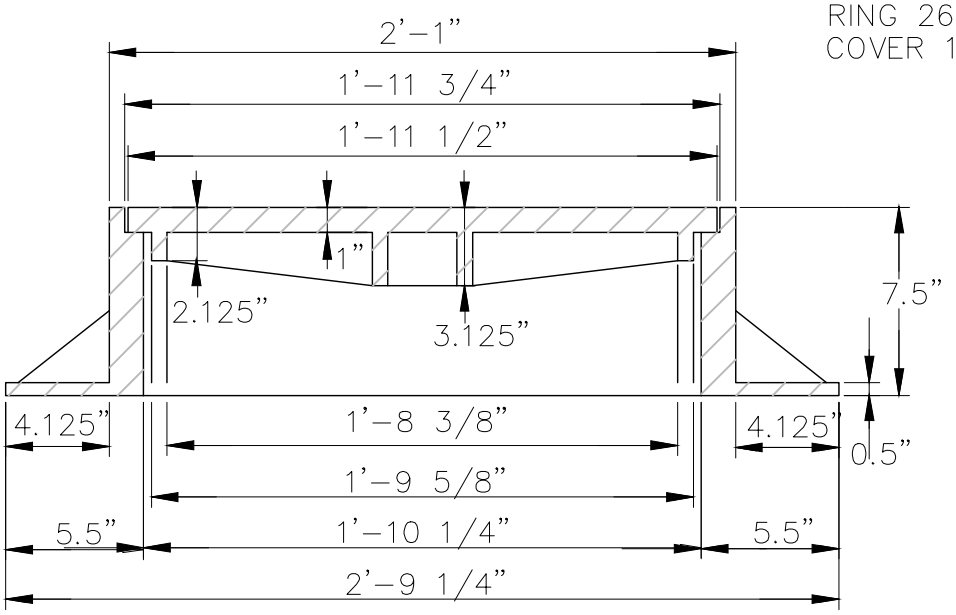

SECTION "A-A"

	STANDARD DETAIL	CITY OF WILMINGTON NORTH CAROLINA
DATE: 2001	STANDARD MAN-HOLE RING AND COVER	CITY OF WILMINGTON ENGINEERING PO BOX 1810 WILMINGTON, NC 28402 (910) 341-7807
DRAWN BY JSR/CMR		
CHECKED BY B.P., P.E.		
SCALE NOT TO SCALE		SD 14-02